Job: Date:

Type:

Location:

Notes:

POLES

P1

(102mm) 4’’ straight square steel

The shaft is fabricated using hollow structural steel conforming to CSA G40.21-13 50W. The anchor base flange is fabricated from structural steel conforming to G40.21-44W and is circumferentially welded inside and out to the pole shaft. The hand hole, 12” from the flange plate to the centre of 3” x 5” geometry. One grounding stud is welded inside the pole shaft on centre across from the hand hole opening.The standard finish is paint compiled by 2-Component polyurethane applied over a cured epoxy primer. All poles include anchor rods, nut covers, hand hole, ground stud and a top cap (if applicable).

PREFIX	HEIGHT	SECTION	MATERIAL	DRILL/ TENON	FINISH	OPTIONS

If you are aware of the project requirements, please fill out as best you can the above boxes to configure the pole geometry, required finish and interface/ fixture mount options.

PREFIX	HEIGHT	SECTION	MATERIAL
CE 4S	4m / 15’	4”	0.125”
	6m / 20’	4”	0.125”
CE 4SH	7m / 25’	4”	0.188”

DRILL/ TENON		
D1	**1x Drill 90**	**Loc “C”**
D2	**2x Drill 180**	**Loc “B & D”**
D290	**2x Drill 90**	**Loc “C” & “D”**
D3	**3x Drill**	**Loc “B”, “C” & “D”**
D4	**4x Drill**	
T2	**2” Tenon x 5” Lg. (2.375” O.D.)**	**Post Top**
T2H	**2” Tenon x 9” Lg. (2.375” O.D.)**	**Loc “C”**
T2H2	**2” Tenon x 9” Lg. (2.375” O.D.)**	**Loc “B” & “D”**
T2H3	**2” Tenon x 9” Lg. (2.375” O.D.)**	**Loc “B”, “C” & “D”**
T2H4	**2” Tenon x 9” Lg. (2.375” O.D.)**	
TC	**Custom diameter & length**	***(please specifiy location)***

FINISH	
PP	**Prime Paint Only**
BLP	**Black Paint**
BRP	**Bronze Paint**
DBRP	**Dark Bronze Paint**
WP	**White Paint**
IMSP	**Intermix Metallic Silver Paint**
GP	**Grey Paint**
CP	**Custom Paint *(RAL or Paint Chip req.)***
HDG	**Hot Dipped Galvanized Only**
FPHDG	**Finish Paint over HDG**

OPTIONS		
B/C	**2piece Base Cover, Steel**	
D/R/B	**Duplex Receptacle Base**	**D/R 3’ up from base, Loc. “C”**
D/R/T	**Duplex Receptacle Top**	**D/R 1’ down from top, Loc. “A”**
A/H/H	**Additional Hand Hole Top**	***(please specifiy location)***
CPL500	**1/2” 3000lb Coupling**	***(please specifiy location)***
CPL750	**3/4” 3000lb Coupling**	***(please specifiy location)***
CPL100	**1” 3000lb Coupling**	***(please specifiy location)***
CPL125	**1-1/4” 3000lb Coupling**	***(please specifiy location)***
CCTV	**3/4” Drill hole de-burred**	***(please specifiy location)***
CEB-1-90˚	**Single bullhorn bracket, mounts to T2**	
CEB-2-180˚	**2 bullhorn bracket, mounts to T2**	
CE PTA	***(Require a post top bracket adaptor only? Please describe existing pole geometry with a quick sketch).***	

5110 56th Avenue SE, Calgary, AB.T2C 3S3 cecopoles.ca
T 403 279 0530 F 403 279 0531 info@cecopoles.ca

SFD00001221 34LNL/CE PRINT GRPHC2016

Base Moments calculated for 161Km/h, 1/50yr gust & pole model max. E.P.A., q=0.5kPa

MODEL	SECTION/ MATERIAL	OVERTURNING MOMENT & MAX. ALLOWABLE E.P.A.	SHEAR
CE 4S15	4" X .125" X 15'	10.5 kN m/ 17 sq.ft.	3 kN
CE 4S20	4" X .125" X 20'	11 kN m/ 11 sq.ft.	2.2 kN
CE 4SH24	4" X .188" X 24'	5 kN m/ 5 sq.ft.	2 kN

The AMERICAN SOCIETY OF CIVIL ENGINEERS (ASCE) *identify Special Wind Regions that suggest that classic regional wind values may need to be increased when considering the pole geometry for your specific project. Flat open terrain, foothills and mountain passes where a funnel effect may be created, would all be considered Special Wind Regions.*

POLES

(102mm) 4" straight square steel

P2

CECO POLES & STRUCTURES INC. *is not responsible for site preparation & footings. The information here below provides general guidelines for data in calculating a proper footing size considering variables such as the specific fixture E.P.A., effective projected area, number of fixtures per specified light pole for your project.*

For moment calculations on your specific project please contact us via email or telephone, info@cecopoles.ca and at 403 279 0530.

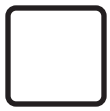

Installation Procedure for Anchor Rods:

1). Prepare footing area as required by local code.
2). Apply steel template in accordance to the anchor rod template illustration provided.
3). Install anchor rods with flatwasher and nut to accommodate the projection illustrated in your provided anchor rod template.
4). CECO POLES & STRUCTURES *light standards are designed for this method of installation. All other methods of light standard installation must be approved by* CECO POLES & STRUCTURES INC.

Anchor Rod Layout

ie: Configuration for CE 4SH25, 4" straight square steel pole.

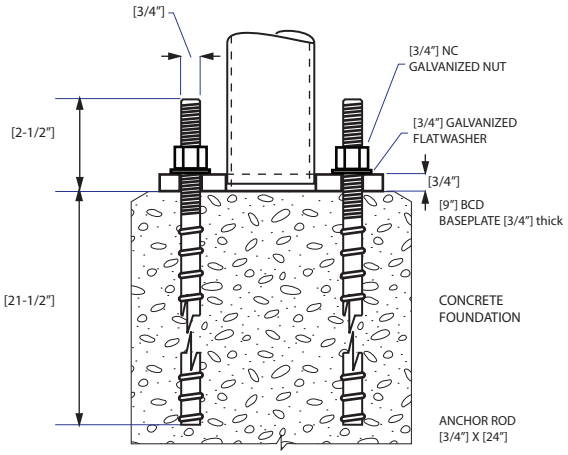

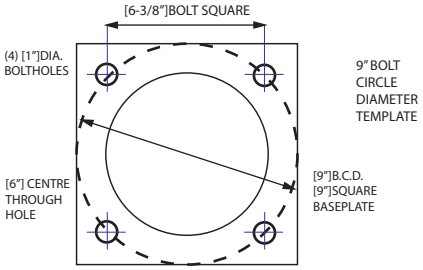

REMEMBER, AS INSTALLER OF THIS LIGHT STANDARD:
Recheck the torque of the anchor bolts as the nut connections may loosen slightly after the pole has been subjected to wind loading.
3/4" UNC 10tpi plain - dry condition sae j429 Gr.2 172 Ft. Lb

Glossary

Bolt Circle Diameter, B.C.D.
When measuring an array of bolt holes located on a given diameter where each bolt hole is equally distant from centre of the circle generating a diameter.

Anchor Rod/ Anchor Bolt, A/R
A structural bolt made from temper-quenched steel or high-tensile strength re-bar of a determined length with a national course thread for a nut application. This item is coated in hot zinc, H.D.G or hot dipped galvanize.

Base Template
A 14 gage laser cut pattern matching the specific bolt circle diameter for your project, and used to properly space and set (4) anchor rods into the rebar cage where concrete will be poured to achieve a level footing with properly projecting anchor rods as well as a conduit run to bring power up to the pre-determined light standard.

Projection
The defined distance of threaded anchor rod exposed out of the concrete to properly receive the pre-determined light standard.

Levelling Shim
*A 3mm thick u-shaped steel plate specifically designed to stradle the anchor rod diameter and used between the bottom of the pole baseplate and top of the concrete footing when installing and levelling the pole. *note: Any gap present beyond 3mm between bottom of baseplate to the top of the concrete footing must be grouted. Do not apply more than one levelling shim per corner.*

APPENDIX A.
This glossary functions as an example of common terminology used in the installation of structural items in or part of a construction site.
For any clarification on terms or symbols used on this installation guide call 403 279 0530 for technical assistance or write to info@cecopoles.ca.

APPENDIX B.
Bolt torque provides only an indirect approximation of material stress. It is estimated that only about 10% of the tightening torque actually results in useful bolt tensioning. A common rule-of-thumb is to provide a minimum length of thread engagement equal to the diameter of the anchor. A more conservativerule-of-thumb is to use a thread engaement length of 1-1/2 times the diameter.

5110 56th Avenue SE, Calgary, AB.T2C 3S3 cecopoles.ca
T 403 279 0530 F 403 279 0531 info@cecopoles.ca

SFD00001221 33LNL/CE PRINT GRPHC2016

Job: Date:

Type:

Location:

Notes:

POLES

P1

(127mm) 5’’ & (152.4mm) 6’’ straight square steel

The shaft is fabricated using hollow structural steel conforming to CSA G40.21-13 50W. The anchor base flange is fabricated from structural steel conforming to G40.21-44W and is circumferentially welded inside and out to the pole shaft. The hand hole, 12” from the flange plate to the centre of 3” x 5” or 4” x 8” geometry. One grounding stud is welded inside the pole shaft on centre across from the hand hole opening.The standard finish is paint compiled by 2-Component polyurethane applied over a cured epoxy primer. All poles include anchor rods, nut covers, hand hole, ground stud and a top cap (if applicable).

PREFIX	HEIGHT	SECTION	MATERIAL	DRILL/ TENON	FINISH	OPTIONS

If you are aware of the project requirements, please fill out as best you can the above boxes to configure the pole geometry, required finish and interface/ fixture mount options.

PREFIX	HEIGHT		SECTION	MATERIAL
CE 5S	4m /	15’	5”	0.188”
CE 6S	6m /	20’	6”	0.250”
	7m /	25’		
	9m /	30’		
	10m /	35’		
	12m /	40’		

DRILL/ TENON		
D1	**1x Drill 90**	**Loc “C”**
D2	**2x Drill 180**	**Loc “B & D”**
D290	**2x Drill 90**	**Loc “C” & “D”**
D3	**3x Drill**	**Loc “B”, “C” & “D”**
D4	**4x Drill**	
T2	**2” Tenon x 5” Lg. (2.375” O.D.)**	**Post Top**
T2H	**2” Tenon x 9” Lg. (2.375” O.D.)**	**Loc “C”**
T2H2	**2” Tenon x 9” Lg. (2.375” O.D.)**	**Loc “B” & “D”**
T2H3	**2” Tenon x 9” Lg. (2.375” O.D.)**	**Loc “B”, “C” & “D”**
T2H4	**2” Tenon x 9” Lg. (2.375” O.D.)**	
TC	**Custom diameter & length**	***(please specifiy location)***

FINISH	
PP	**Prime Paint Only**
BLP	**Black Paint**
BRP	**Bronze Paint**
DBRP	**Dark Bronze Paint**
WP	**White Paint**
IMSP	**Intermix Metallic Silver Paint**
GP	**Grey Paint**
CP	**Custom Paint *(RAL or Paint Chip req.)***
HDG	**Hot Dipped Galvanized Only**
FPHDG	**Finish Paint over HDG**

OPTIONS		
B/C	**2piece Base Cover, Steel**	
D/R/B	**Duplex Receptacle Base**	**D/R 3’ up from base, Loc. “C”**
D/R/T	**Duplex Receptacle Top**	**D/R 1’ down from top, Loc. “A”**
A/H/H	**Additional Hand Hole Top**	***(please specifiy location)***
CPL500	**1/2” 3000lb Coupling**	***(please specifiy location)***
CPL750	**3/4” 3000lb Coupling**	***(please specifiy location)***
CPL100	**1” 3000lb Coupling**	***(please specifiy location)***
CPL125	**1-1/4” 3000lb Coupling**	***(please specifiy location)***
CCTV	**3/4” Drill hole de-burred**	***(please specifiy location)***
CEB-1-90˚	**Single bullhorn bracket, mounts to T2**	
CEB-2-180˚	**2 bullhorn bracket, mounts to T2**	
CEB-3-120˚	**3 bullhorn bracket in radial configuration, mounts to T2**	
CEB-3-180˚	**3 bullhorn bracket in-line, mounts to T2**	
CEB-4-90˚	**4 bullhorn bracket in radial configuration, mounts to T2**	
CEB-4-180˚	**4 bullhorn bracket in-line, mounts to T2**	
CE PTA	***(Require a post top bracket adaptor only? Please describe existing pole geometry).***	

5110 56th Avenue SE, Calgary, AB.T2C 3S3 cecopoles.ca
T 403 279 0530 F 403 279 0531 info@cecopoles.ca

SFD00001221 33LNL/CE PRINT GRPHC2016

Base Moments calculated for 161Km/h, 1/50yr gust & pole model max. E.P.A., q=0.5kPa

MODEL	SECTION/ MATERIAL	OVERTURNING MOMENT & MAX. ALLOWABLE E.P.A.		SHEAR
CE 5S20	5” X .188” X 20’	25 kN m/	31 sq.ft.	5 kN
CE 5S30	5” X .188” X 30’	24 kN m/	16 sq.ft.	3.5 kN
CE 5S35	5” X .188” X 35’	23 kN m/	8 sq.ft.	3 kN

The AMERICAN SOCIETY OF CIVIL ENGINEERS (ASCE) *identify Special Wind Regions that suggest that classic regional wind values may need to be increased when considering the pole geometry for your specific project. Flat open terrain, foothills and mountain passes where a funnel effect may be created, would all be considered Special Wind Regions.*

POLES

P2

(127mm) 5’’ straight square steel

CECO POLES & STRUCTURES INC. *is not responsible for site preparation & footings. The information here below provides general guidelines for data in calculating a proper footing size considering variables such as the specific fixture E.P.A., effective projected area, number of fixtures per specified light pole for your project.*

For moment calculations on your specific project please contact us via email or telephone, info@cecopoles.ca and at 403 279 0530.

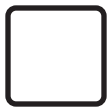

Installation Procedure for Anchor Rods:

1). Prepare footing area as required by local code.
2). Apply steel template in accordance to the anchor rod template illustration provided.
3). Install anchor rods with flatwasher and nut to accommodate the projection illustrated in your provided anchor rod template.
4). CECO POLES & STRUCTURES *light standards are designed for this method of installation. All other methods of light standard installation must be approved by* CECO POLES & STRUCTURES INC.

Anchor Rod Layout

ie: Configuration for CE5S30, 5” straight square steel pole.

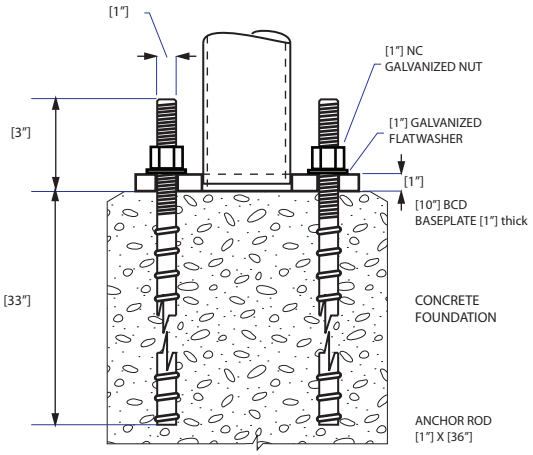

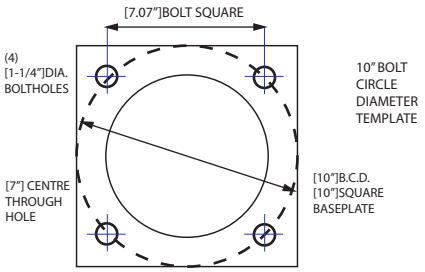

REMEMBER, AS INSTALLER OF THIS LIGHT STANDARD:
Recheck the torque of the anchor bolts as the nut connections may loosen slightly after the pole has been subjected to wind loading.
1” UNC 8tpi plain - dry condition sae j429 Gr.2 250 Ft. Lb

Glossary

Bolt Circle Diameter, B.C.D.
When measuring an array of bolt holes located on a given diameter where each bolt hole is equally distant from centre of the circle generating a diameter.

Anchor Rod/ Anchor Bolt, A/R
A structural bolt made from temper-quenched steel or high-tensile strength re-bar of a determined length with a national course thread for a nut application. This item is coated in hot zinc, H.D.G or hot dipped galvanize.

Base Template
A 14 gage laser cut pattern matching the specific bolt circle diameter for your project, and used to properly space and set (4) anchor rods into the rebar cage where concrete will be poured to achieve a level footing with properly projecting anchor rods as well as a conduit run to bring power up to the pre-determined light standard.

Projection
The defined distance of threaded anchor rod exposed out of the concrete to properly receive the pre-determined light standard.

Levelling Shim
*A 3mm thick u-shaped steel plate specifically designed to stradle the anchor rod diameter and used between the bottom of the pole baseplate and top of the concrete footing when installing and levelling the pole. *note: Any gap present beyond 3mm between bottom of baseplate to the top of the concrete footing must be grouted. Do not apply more than one levelling shim per corner.*

APPENDIX A.
This glossary functions as an example of common terminology used in the installation of structural items in or part of a construction site.
For any clarification on terms or symbols used on this installation guide call 403 279 0530 for technical assistance or write to info@cecopoles.ca.

APPENDIX B.
Bolt torque provides only an indirect approximation of material stress. It is estimated that only about 10% of the tightening torque actually results in useful bolt tensioning. A common rule-of-thumb is to provide a minimum length of thread engagement equal to the diameter of the anchor. A more conservativerule-of-thumb is to use a thread engaement length of 1-1/2 times the diameter.

5110 56th Avenue SE, Calgary, AB.T2C 3S3 cecopoles.ca
T 403 279 0530 F 403 279 0531 info@cecopoles.ca

SFD00001222 33LNL/CE PRINT GRPHC2016

Base Moments calculated for 161Km/h, 1/50yr gust & pole model max. E.P.A., q=0.5kPa

MODEL	SECTION/ MATERIAL	OVERTURNING MOMENT & MAX. ALLOWABLE E.P.A.		SHEAR
CE 6S30	6” X .188” X 30’	29 kN m/	25 sq.ft.	4.0 kN
CE 6S35	6” X .250” X 35’	26 kN m/	16 sq.ft.	3.3 kN
CE 6S40	6” X .250” X 40’	24 kN m/	10 sq.ft.	3.0 kN

The AMERICAN SOCIETY OF CIVIL ENGINEERS (ASCE) *identify Special Wind Regions that suggest that classic regional wind values may need to be increased when considering the pole geometry for your specific project. Flat open terrain, foothills and mountain passes where a funnel effect may be created, would all be considered Special Wind Regions.*

POLES

P3

(152.4mm) 6’’ straight square steel

CECO POLES & STRUCTURES INC. *is not responsible for site preparation & footings. The information here below provides general guidelines for data in calculating a proper footing size considering variables such as the specific fixture E.P.A., effective projected area, number of fixtures per specified light pole for your project.*

For moment calculations on your specific project please contact us via email or telephone, info@cecopoles.ca and at 403 279 0530.

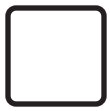

Installation Procedure for Anchor Rods:

1). Prepare footing area as required by local code.
2). Apply steel template in accordance to the anchor rod template illustration provided.
3). Install anchor rods with flatwasher and nut to accommodate the projection illustrated in your provided anchor rod template.
4). CECO POLES & STRUCTURES *light standards are designed for this method of installation. All other methods of light standard installation must be approved by* CECO POLES & STRUCTURES INC.

Anchor Rod Layout

ie: Configuration for CE6S40, 6” straight square steel pole.

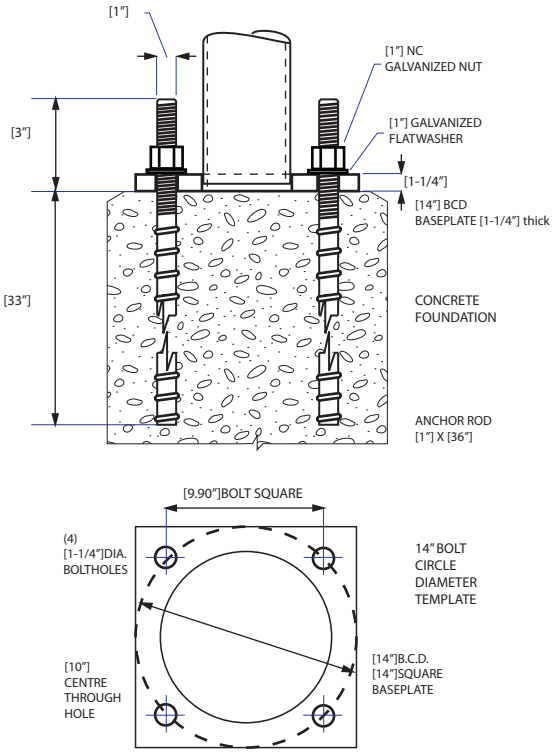

REMEMBER, AS INSTALLER OF THIS LIGHT STANDARD:
Recheck the torque of the anchor bolts as the nut connections may loosen slightly after the pole has been subjected to wind loading.
1” UNC 8tpi plain - dry condition sae j429 Gr.2 250 Ft. Lb

Glossary

Bolt Circle Diameter, B.C.D.
When measuring an array of bolt holes located on a given diameter where each bolt hole is equally distant from centre of the circle generating a diameter.

Anchor Rod/ Anchor Bolt, A/R
A structural bolt made from temper-quenched steel or high-tensile strength re-bar of a determined length with a national course thread for a nut application. This item is coated in hot zinc, H.D.G or hot dipped galvanize.

Base Template
A 14 gage laser cut pattern matching the specific bolt circle diameter for your project, and used to properly space and set (4) anchor rods into the rebar cage where concrete will be poured to achieve a level footing with properly projecting anchor rods as well as a conduit run to bring power up to the pre-determined light standard.

Projection
The defined distance of threaded anchor rod exposed out of the concrete to properly receive the pre-determined light standard.

Levelling Shim
*A 3mm thick u-shaped steel plate specifically designed to stradle the anchor rod diameter and used between the bottom of the pole baseplate and top of the concrete footing when installing and levelling the pole. *note: Any gap present beyond 3mm between bottom of baseplate to the top of the concrete footing must be grouted. Do not apply more than one levelling shim per corner.*

APPENDIX A.
This glossary functions as an example of common terminology used in the installation of structural items in or part of a construction site.
For any clarification on terms or symbols used on this installation guide call 403 279 0530 for technical assistance or write to info@cecopoles.ca.

APPENDIX B.
Bolt torque provides only an indirect approximation of material stress. It is estimated that only about 10% of the tightening torque actually results in useful bolt tensioning. A common rule-of-thumb is to provide a minimum length of thread engagement equal to the diameter of the anchor. A more conservativerule-of-thumb is to use a thread engaement length of 1-1/2 times the diameter.

5110 56th Avenue SE, Calgary, AB.T2C 3S3 cecopoles.ca
T 403 279 0530 F 403 279 0531 info@cecopoles.ca